Donaldson®
Torit®

DIFFERENTIAL PRESSURE

What it is and why you should care

by Bill Rosckes & LaJean Larsen, Donaldson Company, Inc.

What dust collector owner and/or operator doesn't want to see lower total emissions, longer filter life or compressed air savings? Yet, many lack a basic understanding of differential pressure, which could guide them towards the changes that would help them realize these savings. This article addresses differential pressure as it relates to dry dust collection systems.

WHAT IS DIFFERENTIAL PRESSURE?

Differential pressure is the difference in pressure from the dirty side (filter side or dirty air plenum) to the clean side (clean air plenum) of a dust collector. It is a measure of all resistances to airflow between the two chambers of the collector and typically includes the loss through the orifices of the tubesheet, the resistance of the clean filter media, and the resistance of dust collected on the filter media.

WHAT DOES DIFFERENTIAL PRESSURE TELL US?

Changes in the differential pressure are an indication of physical changes in the filters. A sudden drop in differential pressure drop may alert us that a filter leak or rupture has occurred. A sudden increase in differential pressure drop may be an indication that our cleaning system has stopped functioning, or a material discharge device is no longer operating correctly.

A more gradual increase in differential pressure drop may be a result of the additional resistance accumulated dust on the filters is placing on airflow going through the dust collector. You can use the reading of this resistance to determine the relative condition of the filters as the dust builds up on the filters and to initiate cleaning of the filters when needed.

HOW DO YOU MEASURE DIFFERENTIAL PRESSURE?

Differential pressure is measured using a variety of gauges including: Magnehelic® Gauges, Photohelic® Gauges, or digital electronic pressure drop indicators. These gauges typically measure differential pressure in units of inches of water gauge ("w.g.) though other scales such as mm of water, mm of mercury, or pascals are used.

Gauges like the Magnehelic Gauge measure differential pressure, but have no electronic control capabilities. Other gauges like the Photohelic Gauge or digital electronic pressure drop indicators can both measure the differential pressure and offer the capability to use an output to control filter cleaning based on differential pressure.

HOW DOES A TYPICAL CLEANING SYSTEM WORK?

A typical cleaning system for the filters within dust collectors uses compressed air. The cleaning system consists of an air manifold mounted on the collector connected to a compressed supply. Attached to the manifold are diaphragm valves that have tubes (blowpipes) that go into the collector and are lined up with each filter set. Inside each diaphragm valve is a rubber diaphragm that holds equal pressure on both sides of the diaphragm valve sealing the manifold from each blowpipe.

Attached to the collector is also a solenoid enclosure with generally the same number of solenoid valves as there are diaphragm valves. A tube, typically a 0.25-inch diameter, connects each solenoid valve to a diaphragm valve.

PULSED POSITION

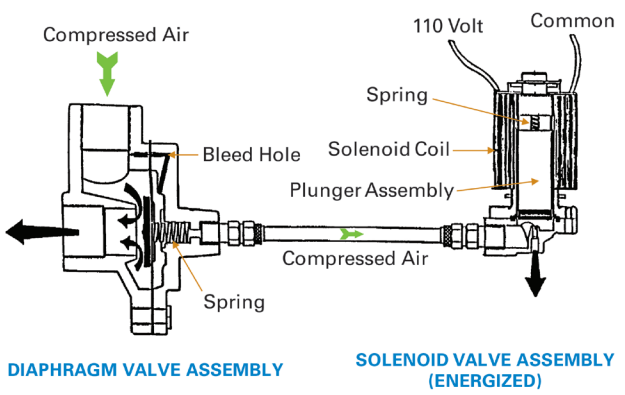

A timer board is part of the system wired to the solenoid valves. The timer board typically requires 110 VAC to operate and, when energized, sends sequential signals to each of the solenoid valves. The solenoid valve plunger assembly allows air to escape through an outlet port when energized, allowing air to bleed off the back of the diaphragm valve. This action allows compressed air from the manifold to enter the blowpipe directing the air into the filters to facilitate cleaning. This pulse of compressed air has a very short duration (typically 100 milliseconds) that cleans the filters from the inside, knocking the dust off the outside surface of the filter. This sequence occurs roughly every 10 seconds, as the timer cycles through each of the solenoid valves. After energizing the last solenoid, the timer board cycles back to the first solenoid, repeating the sequence.

HOW CAN YOU USE DIFFERENTIAL PRESSURE TO CONTROL FILTER CLEANING?

Differential pressure measured by a Photohelic Gauge or other electronic pressure drop indicators, can allow you to use low and high set points to control the cleaning cycle so it will start only when the differential pressure reaches a high point, and will stop when the differential pressure reaches a low set point.

For example: If the high setting is 4-inches w.g. and the low setting is 2-inches w.g., the cleaning cycle will start when the differential pressure reaches 4-inches w.g. and will continue to cycle until the differential pressure reaches the low setting of 2-inches w.g. when the cleaning cycle will stop. Cleaning will not start again until the differential pressure reaches 4-inches w.g.

The benefits of cleaning based on differential pressure include compressed air savings opportunities, lower total emissions, longer life on solenoids and diaphragms valves, and potentially longer filter life. If the collector only cleans when differential pressure exceeds a high set point, the consumption of expensive compressed air is less than if the cleaning system run continuously. Cleaning filters only when required means they are pulsed less frequently, so it takes longer before the total wear-and-tear of pulsing damages the filters. If the filters are also quality surface-loading filters, each pulse is more effective at cleaning, and you need fewer pulses to reach the low differential pressure set point. This reduction in the frequency of pulsing has the added benefit of leaving an effective dust layer on the filter to increase average efficiency. Since the filter can be pulsed when the increase in differential pressure from an excessive dust load is created, the collector runs at higher efficiency longer.

The Delta-P Plus® Controller also has down-time cleaning that allows you to clean the filters after shutting off the main fan to the collector. You can set the duration of time you would like the filters to clean, and the unit will automatically shut off after the duration is complete. This feature is very beneficial because unit cleaning cannot be accidentally left on overnight while a process is not running, which could potentially damage the filters and needlessly consume compressed air. When this feature is used, there should be an inlet blast gate placed on the inlet duct work, and it should be closed during downtime cleaning. Closing the blast gate will limit the ability for dust to migrate out the inlet, without the suction of the fan on.

Because each application is different, the cleaning control set up will be dependent upon the type of dust generated, the loading on the filters, and the hours per day of usage. For example: A very fine, uniform dust particle size with heavy loading on the filters, such as from laser or plasma cutting, may dictate a continuous cleaning cycle to allow filters to recover when the differential pressure starts to increase. A dust that has a larger particle size (not sub-micron particulate) and a broad range of particle sizes may be set up with low and high settings so the collector only pulses when required. This can be advantageous to any worker who may have to be close to the dust collector during cleaning cycles.

WHAT OTHER IMPACT DOES DIFFERENTIAL PRESSURE HAVE?

When selecting fans for a particular application, you must make some assumption for a typical differential pressure, typically 4 to 5-inches of water gauge. This assumed differential pressure plus whatever additional static loss is in the ductwork before and after the collector determines the total static requirement for the fan. If the estimated ductwork static loss is 3-inches and the estimated differential pressure drop across the filters at end of life is 5-inches, you might recommend a fan offering 9 to 10-inches of water gauge static capability at the required airflow. This allows the fan the ability to overcome the differential pressure on the filters when they start to build with dust. Because clean filters will not have 5-inches of static resistance, we recommend a control damper or Variable Frequency Drive (VFD) on the motor to allow you to maintain air volumes at design levels so the system holds capture velocity at the hood, carrying velocity in the ducts and design flow to the collector.

When you inquire when to change filters in your dust collector, the suggestion is often made to do so when the differential pressure reading across the filters exceeds the capacity designed into the fan selection (5-inches in our example), and when the filters can no longer be cleaned to the low differential pressure reading. At that point, it becomes necessary to change filters in order to reestablish design flow. If the system operates with a differential pressure higher than accounted for in the fan selection, there may be a loss of suction at the hood collecting the generated dust. The capture efficiency would then no longer be acceptable, though this is not always the case.

If the fan has sufficient static capability, differential pressure may not cause any immediate problems with dust capture. If this is the case, there is not an immediate need to change filters, and the high and low set points on the cleaning control system can be adjusted upward.

While dust collection applications and scenarios vary widely, most operators would benefit from an increased understanding of differential pressure. Informed operators have the opportunity to make a difference and positively impact the company's bottom line.

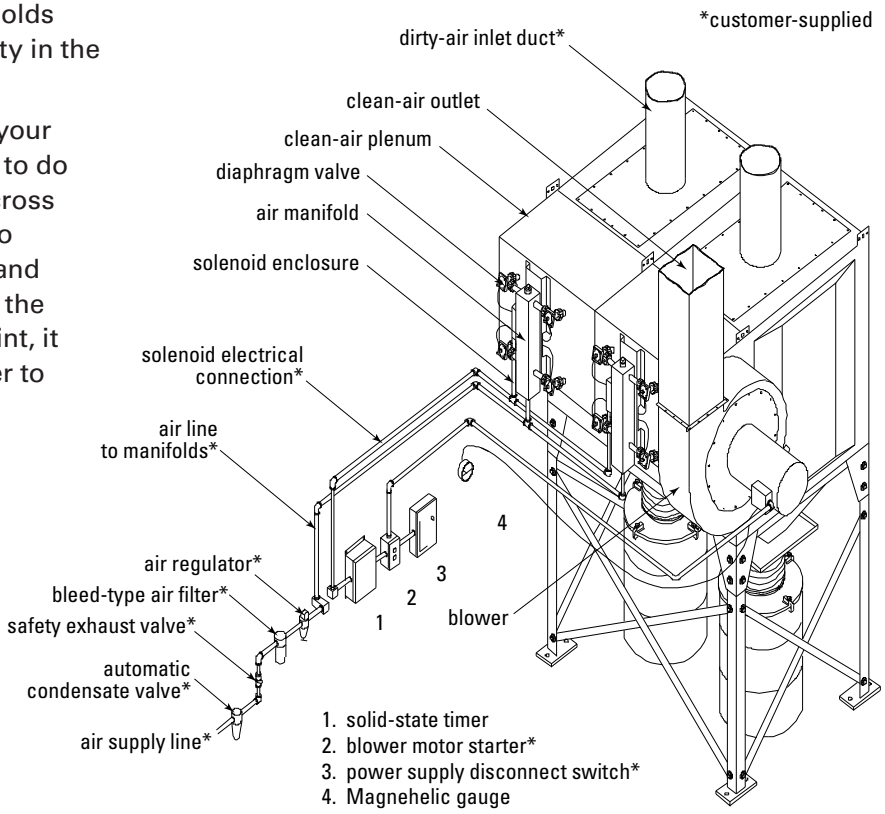

Donaldson Company, Inc.
Torit
P.O. Box 1299
Minneapolis, MN
55440-1299 U.S.A.

Tel 800-365-1331 (USA)
Tel 800-343-3639 (within Mexico)

donaldsontorit@donaldson.com
donaldsontorit.com

© 2012 Donaldson Company, Inc. All Rights Reserved. Information in the document is subject to change without notice.